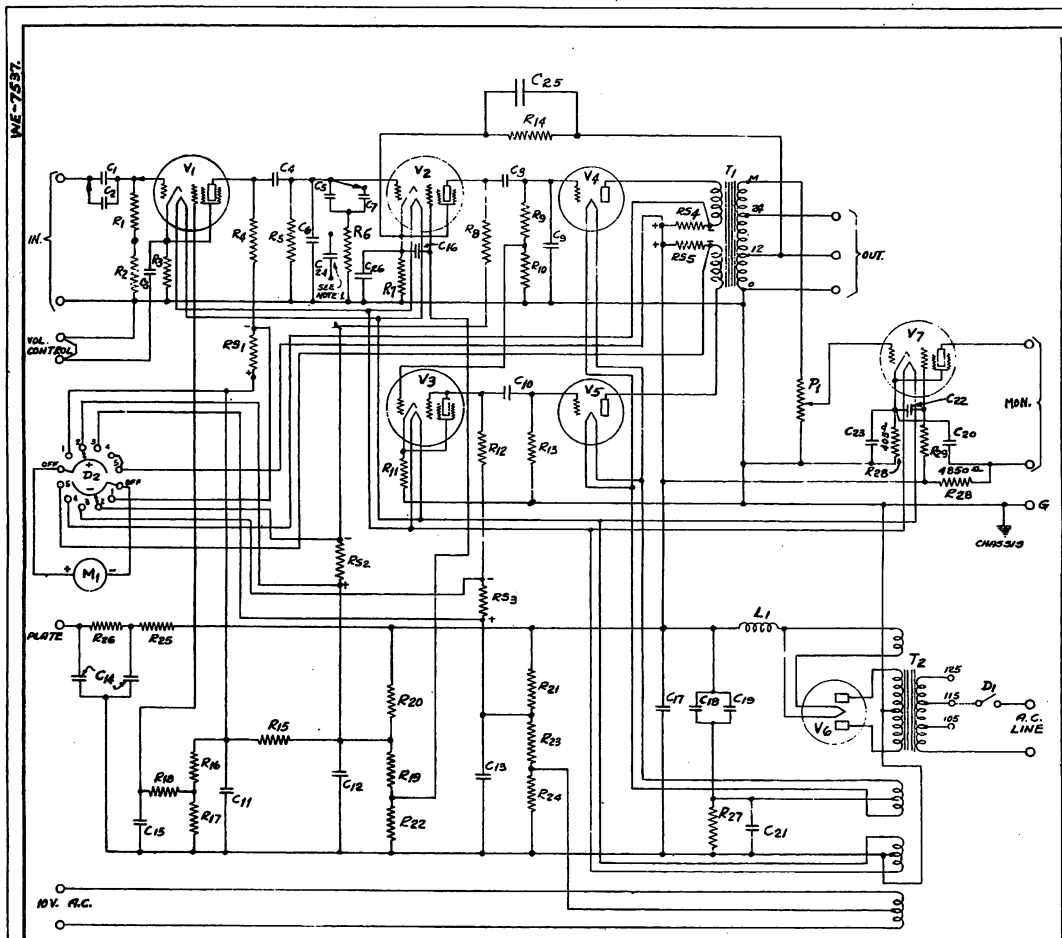

MOTIOGRAPH PART NO.	DESIG.	APPARATUS	VALUE	
MA-2567	C26	AEROVOX #489 CONDENSER	.025 MF.	*
MA-2519	C16	AEROVOX #684 CONDENSER	.1 MF	
MA-2518	C24	AEROVOX #1467 CONDENSER (SEE NOTE:1)	.00025 MF.	
MA-2508	C1, C2.	AEROVOX #684 CONDENSER	.05 MF.	
MA-2509	C3-C23	AEROVOX GM-25 CONDENSER WITH INSULATING WASHER & CAN LUG.	25. MF.	
MA-2510	C4, C8, C10	AEROVOX 400V. NON-IND. PAPER COND. IN TYPE 2EM CAN 1"x1 1/16" WAX FILLED, WITH MOUNTING RING.	.05 MF.	
MA-2583	C5, C7, C25	AEROVOX #1467 CONDENSER.	.01 MF.	*
MA-2584	C9, C15	AEROVOX #1467 CONDENSER	.001 MF.	*
MA-2587	C11, C13	AEROVOX 1-450 CONDENSER	16 MF.	
MA-2586	C12	AEROVOX 1-475 CONDENSER	8 MF.	
MA-2585	C14	AEROVOX GG-450 CONDENSER WITH INSULATING WASHER & CAN LUG	8-8 MF.	
MA-2567	C6	AEROVOX #1467 CONDENSER	.0005 MF.	*
MA-2516	C17, C18, C19 C20, C22	AEROVOX 1-G-8 CONDENSER. 500V. D.C. OPER. VOLTAGE 1 3/8" x 3 1/4" LG. CAN.	8 MF.	
MA-2517	C21	AEROVOX GM-100 CONDENSER WITH INSULATING WASHER & CAN LUG.	25 MF.	
MA-2521	D1	H&H #20992 TUMBLER SWITCH.		
MA-2522	D2	YAXLEY R.L. SINGLE GANG SWITCH PER ASP-8857, ISSUE 3.		
MA-2523	L1	TA-4205 RETARD COIL		
MA-2524	M1	TRIPLETT #223 MILLIAMETER 0-1 MA. PER TRIPLETT N.Y. OFFICE QUOTATION #101.		
MA-2525	P1	I.R.C. TYPE "C" POTENTIOMETER (SEE NOTE:2)	200,000 Ω	±10%
MA-2531	R1, R10	I.R.C. TYPE BT 1/2 RESISTOR	70,000 Ω	
MA-2532	R2	" " BT 1/2 "	30,000 Ω	
MA-2533	R3	" " BT 1/2 "	5,500 Ω	
MA-2534	R4	" " BT 1/2 "	100,000 Ω	
MA-2535	R5, R13	" " BT 1/2 "	500,000 Ω	
MA-2536	R6	" BT 1/2 "	65,000 Ω	
MA-2551	R12	" " BT 1/2 "	75,000 Ω	
MA-2537	R7, R11, R14	" " BT 1/2 "	3,000 Ω	
MA-2538	R8	" " BT 1/2 "	125,000 Ω	
MA-2539	R9	" " BT 1/2 "	400,000 Ω	
MA-2540	R15	" " BT-2 "	17,000 Ω	
MA-2541	R16	" " BT-2 "	50,000 Ω	
MA-2547	R17	" " BT-1 "	120,000 Ω	
MA-2542	R18	" " BT-1 "	100,000 Ω	
MA-2543	R19	" " BT-2 "	110,000 Ω	
MA-2544	R20, R25, R26	" " BT-2 "	10,000 Ω	
MA-2545	R21	" " BT-2 "	40,000 Ω	
MA-2546	R22	" " BT-1 "	20,000 Ω	
MA-2553	R23	" " BT-2 "	75,000 Ω	
MA-2552	R24	" " BT-1 "	7,500 Ω	
MA-2548	R27	" " M-1191 "	570 Ω	
MA-2549	R28	" " M-1192 "	405-4850 Ω	
MA-2550	R29	" " BT-2 "	25,000 Ω	
MA-2554	R51	DAVEN TYPE "BAW" RESISTOR	33.0 Ω ±1%	
MA-2555	R52	" " "BAW" "	28.4 Ω ±1%	
MA-2556	R53	" " "BAW" "	13.4 Ω ±1%	
MA-2557	R54, R55	" " "BAW"	.266 Ω ±15%	
MA-2505	T1	TA-4206 TRANSFORMER		
MA-2506	T2	TA-4207 "		
	V1, V2, V3	310-B VACUUM TUBE		
	V4, V5	300-A VACUUM TUBE		
	V6	274-A VACUUM TUBE		
	V7	336-A VACUUM TUBE		

DWG. CORRES. PANEL WITH R.R.D. CHGS. W ASD-8552 ISSUE 3	APP'D
ISSUE 1 1-15-40	
ISSUE 1 7-15-40 C24 & C26 ADDED. C17 WAS .0005 MF. "6" WAS ADDED. MOTIOGRAPH PART NO.'S ADDED.	RTD
ISSUE 2 8-30-41	RTD

NOTE:

1. THIS CONDENSER IS USED FOR CHANGING THE FREQUENCY CHARACTERISTIC.
2. I.R.C. TYPE "CS" POT. TAPER "C" DIMEN. A 3/8" FLAT DIN'S B-3/8", C 5/8". CLOCK-WISE ROTATION LOOKING AT FRONT, NO SWITCH OR LOCATING PIN FURNISH 2 HEX. NUTS.
3. M-1 METERS MAY BE AS SHOWN (METAL CASE) OR MODEL 221 (BAKELITE CASE) OR MARION BAKELITE CASE. SPECIFY TYPE WHEN ORDERING. IN SOME T-1 TRANSFORMERS INTERNAL LEADS TO "B" TERMINALS ARE REVERSED CAUSING SWITCH POSITION 4 TO READ V-5 PLATE CURRENT AND VICE VERSA. THIS MAY BE CORRECTED BY REVERSING BLUE & YELLOW WIRES AT "B" TERMINALS.

* IN TA-7467 AMPLIFIERS C_{25} AND C_{26} WERE OMITTED AND C_{15} WAS .0005 MF.

WE-7538 - WIRING DIAGRAM

ASSOCIATED DRAWINGS

TA-7467A AMPLIFIER

SCHEMATIC

WESTERN ELECTRIC SOUND SYSTEMS

MOTIOGRAPH, CHICAGO, ILL.

DRAWN BY G.L.F. DATE 8-17-38 APP'D

CHECKED BY M-B DATE 8-6-38

SCALE: NO

WE-7537

WE-7537

TA-7467-A
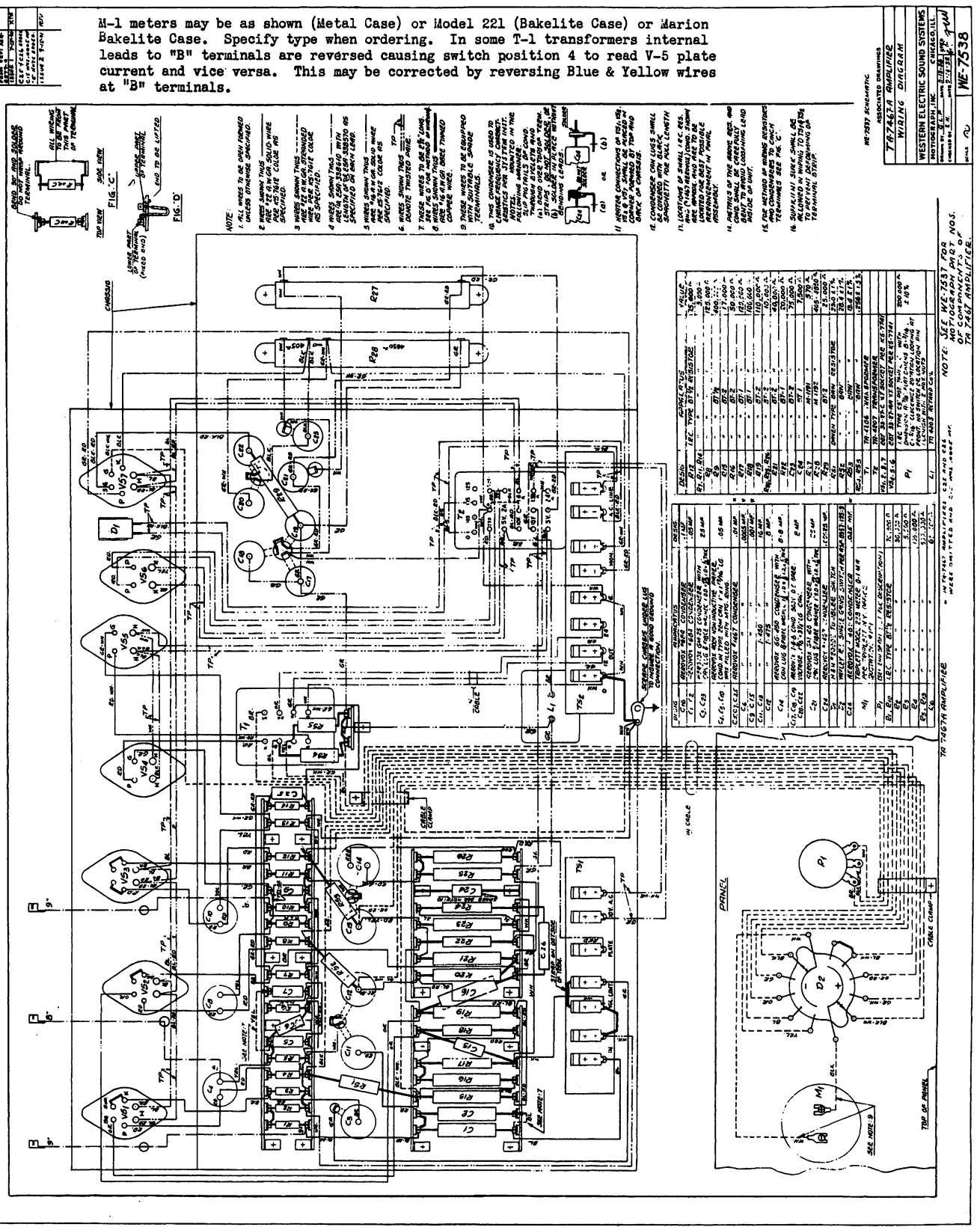
M-1 meters may be as shown (Metal Case) or Model 221 (Bakelite Case) or Marion Bakelite Case. Specify type when ordering. In some T-1 transformers internal leads to "B" terminals are reversed causing switch position 4 to read V-5 plate current and vice versa. This may be corrected by reversing Blue & Yellow wires at "B" terminals.