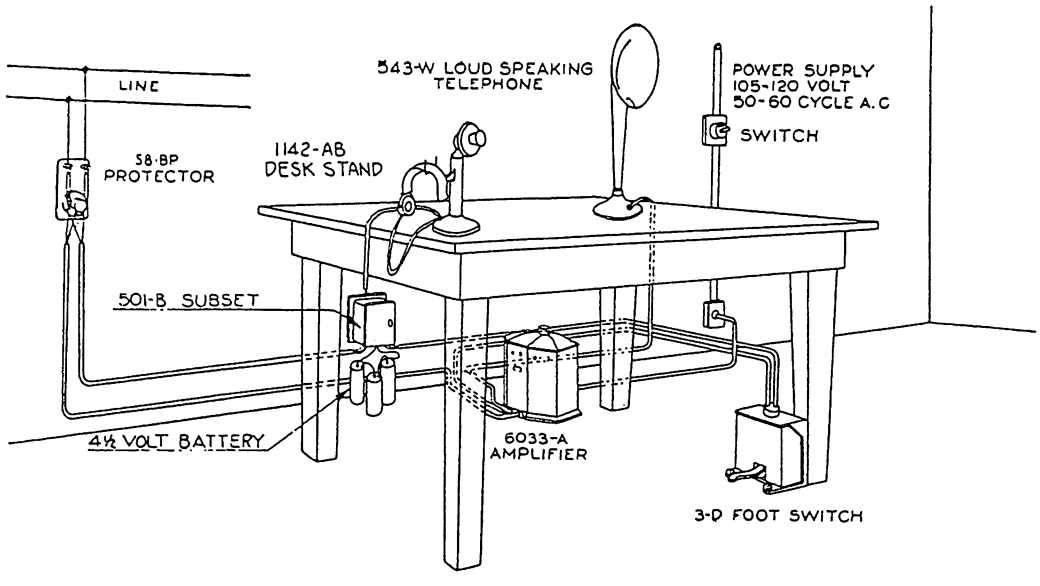
LINE
58-BP PROTECTOR
1142-AB DESK STAND
543-W LOUD SPEAKING TELEPHONE
POWER SUPPLY 105-120 VOLT 50-60 CYCLE A.C
SWITCH
501-B SUBSET
4½ VOLT BATTERY
6033-A AMPLIFIER
3-D FOOT SWITCH

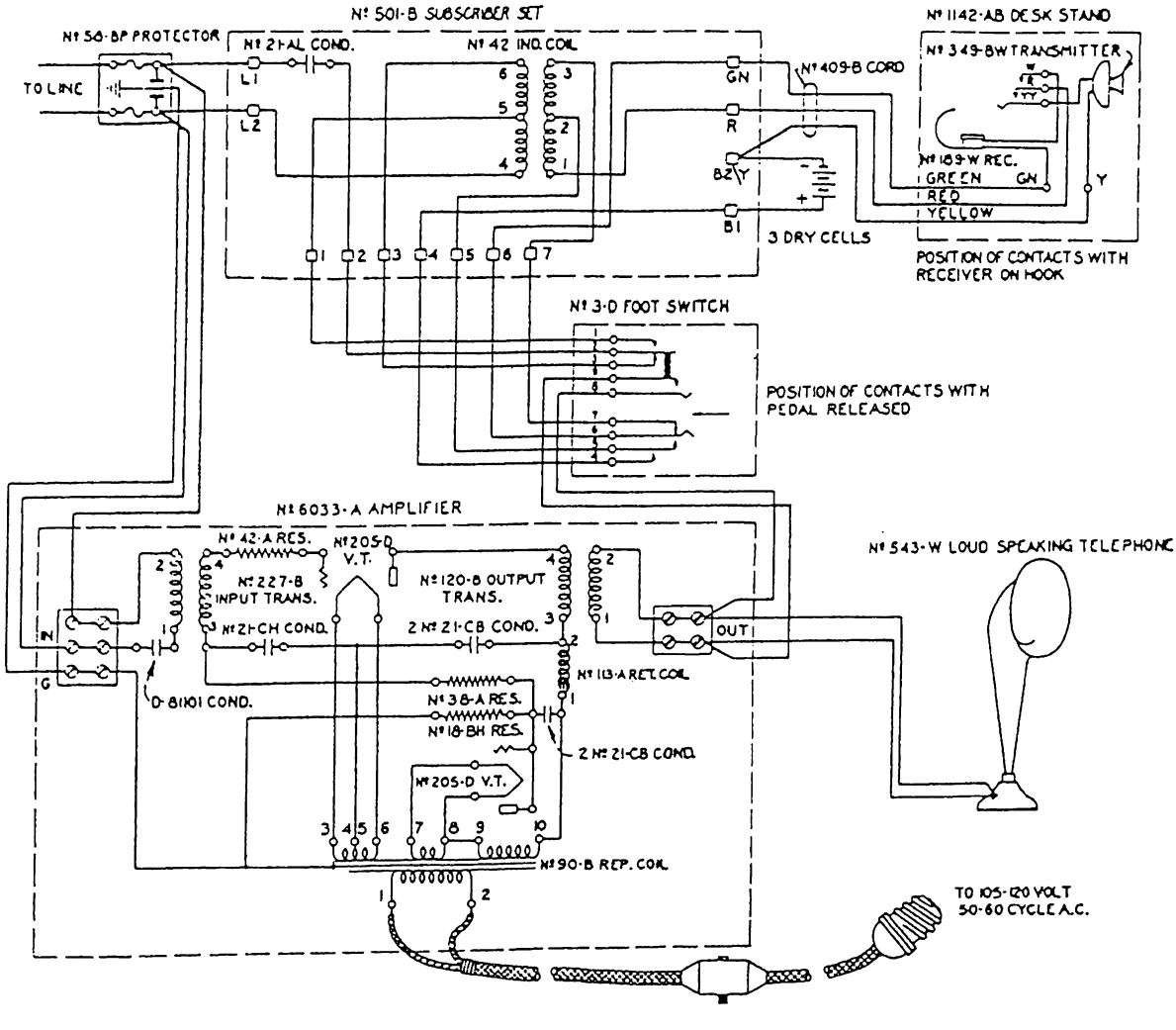
Nº 501-B SUBSCRIBER SET
Nº 58-BP PROTECTOR
TO LINE
Nº 21-AL COND.
Nº 42 IND. COIL
L1
L2
GN
R
B2
Y
B1
Nº 409-B CORD
3 DRY CELLS
Nº 1142-AB DESK STAND
Nº 349-BW TRANSMITTER
Nº 189-W REC.
GREEN GN
RED
YELLOW
POSITION OF CONTACTS WITH RECEIVER ON HOOK
Nº 3-D FOOT SWITCH
POSITION OF CONTACTS WITH PEDAL RELEASED
Nº 6033-A AMPLIFIER
Nº 42-A RES.
Nº 205-D V.T.
Nº 227-B INPUT TRANS.
Nº 120-B OUTPUT TRANS.
Nº 21-CH COND.
2 Nº 21-CB COND.
IN
OUT
D-81101 COND.
Nº 113-A RET. COIL
Nº 38-A RES.
Nº 18-BH RES.
2 Nº 21-CB COND.
Nº 205-D V.T.
Nº 90-B REP. COIL
Nº 543-W LOUD SPEAKING TELEPHONE
TO 105-120 VOLT 50-60 CYCLE A.C.

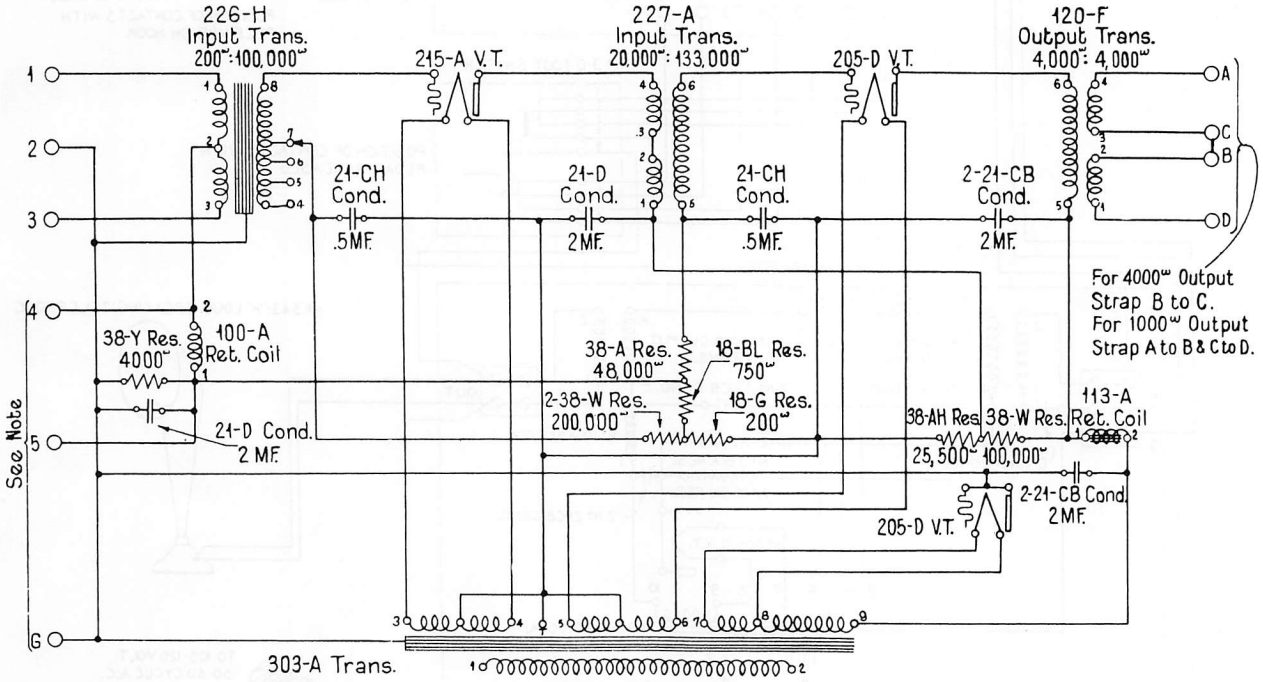

Note: For use with Phono. Reproducer
strap terminals 4, 5 and G together.