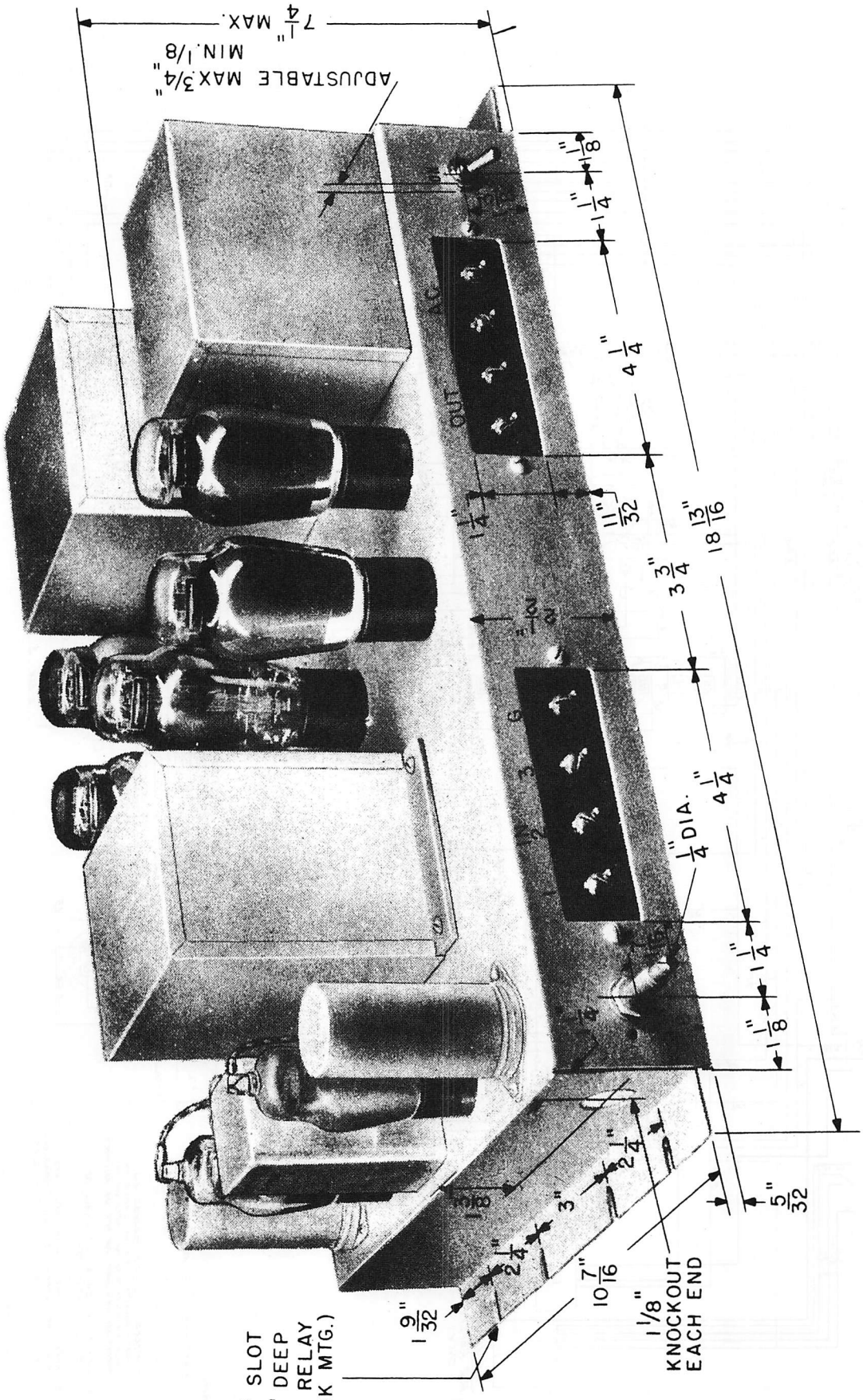
ADJUSTABLE MAX. 3/4"
MIN. 1/8"
7 1/4" MAX.
1/8"
1 1/4"
4 1/4"
11/32"
1 1/4"
3 3/4"
18 13/16"
1/4" DIA.
4 1/4"
1 1/4"
1 1/8"
1/4"
2 1/4"
3"
2 1/4"
1 9/32"
10 7/16"
1 1/8" KNOCKOUT EACH END
5/32"
1/4" SLOT 13/32" DEEP (STD. RELAY RACK MTG.)
OUT
AC

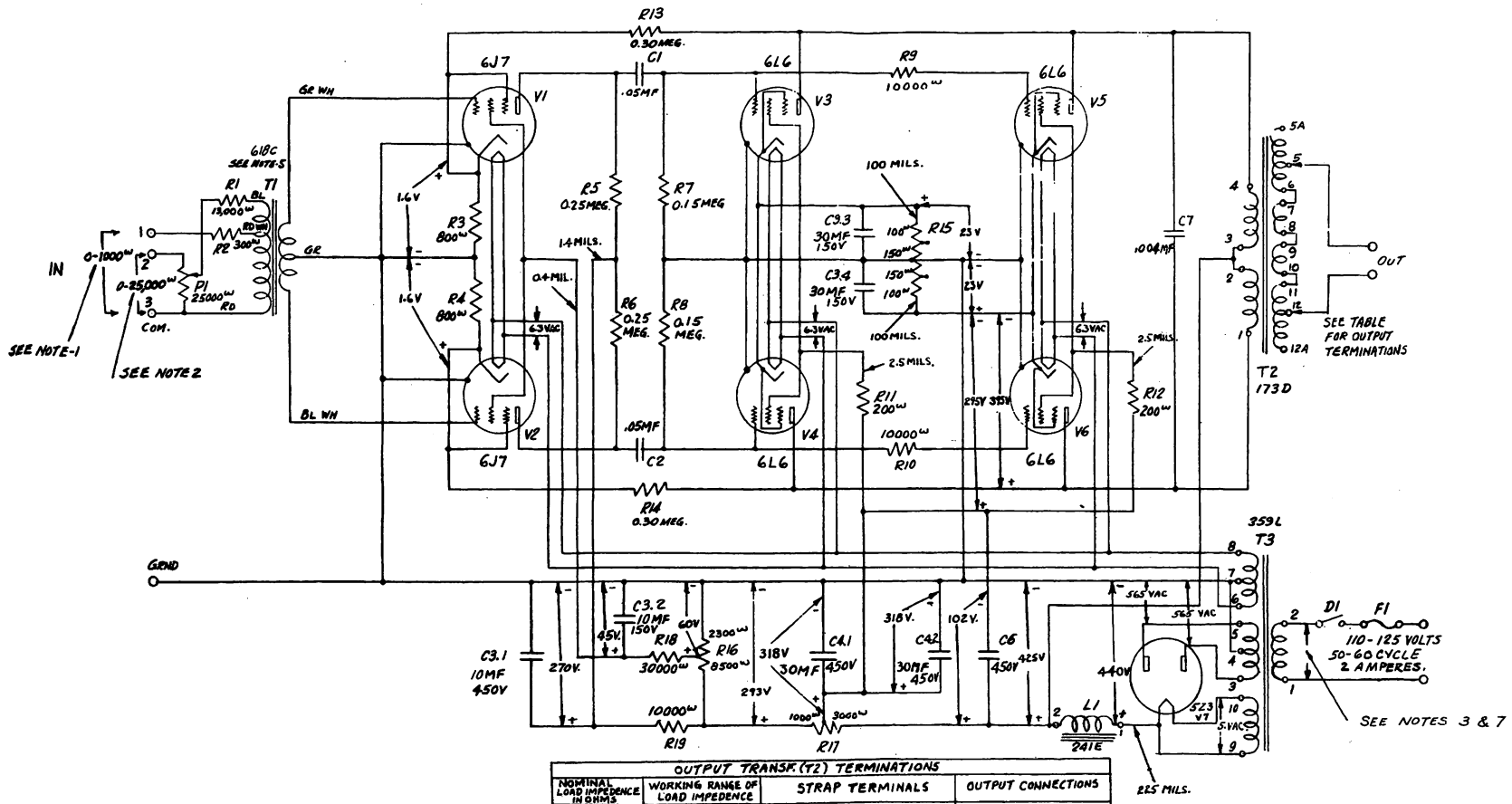

OUTPUT TRANSF. (T2) TERMINATIONS			
NOMINAL LOAD IMPEDENCE IN OHMS	WORKING RANGE OF LOAD IMPEDENCE	STRAP TERMINALS	OUTPUT CONNECTIONS
500	250 TO 1000	6TO7 8TO9 10TO11	5A AND 12A
125	62 TO 250	6TO7 10TO11 5ATO9 8TO12A	5A AND 12A
30	20 TO 62	6TO7 8TO9 10TO11	5 AND 12
17	10 TO 20	7TO9 8TO10 6TO7 10TO11	5 AND 12
7.5	4 TO 10	6TO7 10TO11 8TO12 5TO9	5 AND 12
2	1 TO 4	5TO7TO9TO11 6TO8TO10TO12	5 AND 12

NOTES:

1. Maximum Gain Connection, Source Impedance 0 to 1000 ohms.
2. Bridging Connection, Source Impedance 0 to 25,000 ohms.
3. The voltage and current values shown are for a 60 cycle line voltage of 117.5 volts and a line current of 1.65 amperes.
4. Output connections shown on Table.
5. The 618C Input Transformer replaces the 288F Input Transformer previously specified. The 0.15 Meg. Resistors R7 and R8 replace the 0.25 Meg. Resistors. It is important that R7 and R8 have the same value.
6. The values of current, voltage and resistance shown are average values and are intended only as an aid in servicing the amplifier. Readings should be taken with the equivalent of a "Volt-Ohmmeter" whose resistance is at least 1000 ohms per volt.
7. This amplifier is good for 50 cycle operation only when so marked on the nameplate on the front of the chassis.

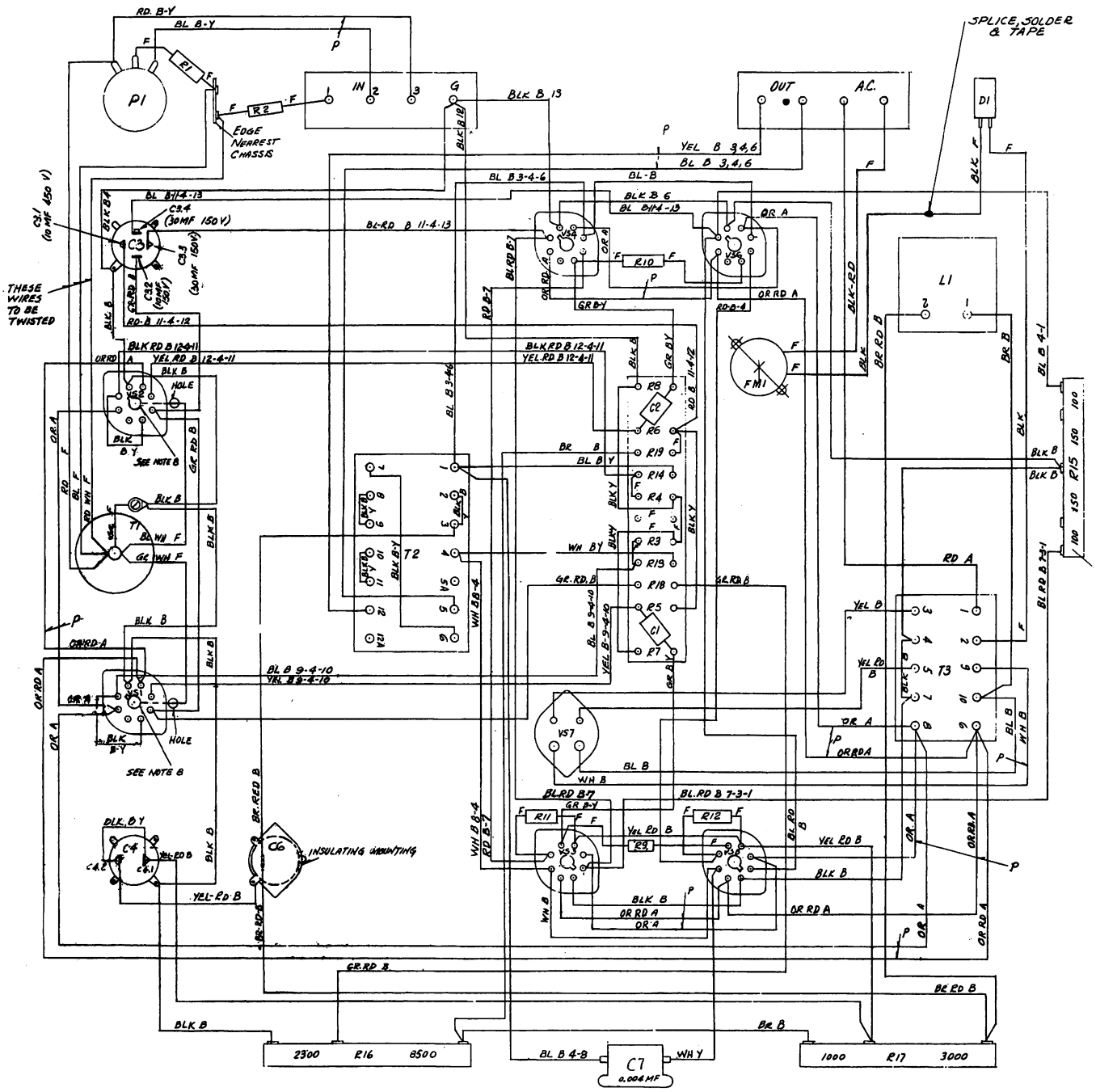
SPLICE, SOLDER & TAPE
IN
OUT
A.C.
P1
D1
L1
T1
T2
T3
VS1
VS2
VS3
VS4
VS5
VS6
VS7
FM1
EDGE NEAREST CHASSIS
THESE WIRES TO BE TWISTED
SEE NOTE B
HOLE
INSULATING MOUNTING
2300
R16
8500
1000
R17
3000
C7
0.004 MF

118A AMPLIFIER

General

The 118A Amplifier is a medium gain, high power, bridging amplifier and is adaptable to general purpose use as an individual power amplifier. When used with the Western Electric 117A Amplifier it forms the complete amplification equipment of a high quality economy sound system and it also is particularly suited for use in sound systems where several amplifiers such as the 118A are required to supply power for separate groups of loud speakers. It is ideal for indoor or outdoor meetings of a temporary or permanent nature and its adaptability meets the ever changing requirements of such installations.

Typical Operating Characteristics

Gain at 1000 cycles when operating from a 600 ohm source is 53 db for the bridging input connection and 63 db for the non-bridging high gain input connection.

Useful frequency range 35 to 15,000 cycles.

Vacuum Tubes

The 118A Amplifier employs the following vacuum tubes which should be inserted in the designated sockets:

4—6L6 type amplifier tubes (glass or metal tubes)
2—6J7 type amplifier tubes (glass or metal tubes)
1—5Z3 type rectifier tube (glass tube only)

ON and OFF Switch

The ON and OFF switch is located near the right end of the chassis.

The switch should be in the OFF position when changing tubes or making any connections to the amplifier.

A threaded collar is provided to permit the switch lever to extend an adjustable distance beyond the surface of the chassis.

Power Supply Connection

Connect an alternating current power supply source of voltage between 110 and 125 volts to the terminals marked "AC."

All 118A Amplifiers may be operated from power supply sources of nominal 60 cycles frequency but only those amplifiers specifically marked "50-60" cycles on the nameplate on the front of the chassis are suitable for operation from nominal 50 cycle power supply sources.

The amplifier is fused with a 2-ampere Fustat. The nearest distributor should be consulted for sources of Fustats.

Ground Connection

Connect a good building ground to the terminal marked G.

Gain Control

The 25,000 ohm gain control as furnished is intended as a means of infrequent gain adjustment rather than for continuous control of program level. When the 118A Amplifier is used with a high gain preliminary amplifier such as the 117A, it is recommended that the gain of the power amplifier be so adjusted that its overload point will be reached slightly earlier than that of the voltage amplifier.

The gain control shaft is located near the left end of the chassis.

The shaft of this control may be cut off if a shorter length is desired.

No control knob is supplied with the amplifier as it is felt that the knob should conform with other equipment in a given installation.

The range of gain adjustment is approximately 40 decibels and the rotation is clockwise for an increase in amplifier gain.

Connection to the gain control may be made through input terminals 2 and 3.

Input Connection

While not necessary in some cases it is recommended that as a general rule the connections between the amplifier input source and the 118A Amplifier input terminals be shielded and the shield connected to the amplifier ground terminal "G." This permits greater flexibility of output circuit wiring without electrical feedback between input and output lead and will reduce noise picked up in the input leads. Two input connections are available as follows:

Bridging connection—This is a high impedance connection (internal impedance 25,000 ohms) which may be bridged across normal 600 ohm circuits without changing the level in these circuits. To use this connection connect the input source to terminals 2 and 3 of the amplifier. If the input source is unbalanced (that is one side grounded) connect the grounded side to terminal 3. If no input circuit ground is provided connect terminal 3 to terminal G. The gain control operates satisfactorily when the input source is connected to terminals 2 and 3.

High gain connection—This is a low impedance high gain connection which when bridged across a 600 ohm circuit, causes a slight level change in the circuit. (Internal input impedance 1500 ohms.) A gain increase of 10 db over the bridging connection is obtained with this connection. To use this connection connect the input source to terminals 1 and 3 of the amplifier. It is recommended that terminal 3 be connected to the input circuit ground or to the amplifier ground. The gain control is not connected in this circuit and must therefore be left permanently in its maximum gain position.

Output Connection

Output load impedances between 1 and 1000 ohms may be connected to the terminals marked OUT.

As delivered the amplifier is suitable for connection to load impedances between 20 and 62 ohms. For other load impedances the strapping of the terminal of the Output Transformer must be changed in accordance with the following table:

Nominal Load Impedance in Ohms	*Working Range of Load Impedance (Ohms)*	*Strap Terminals of Output Trans. as follows:*				*Output Connection to following terminals of Output Trans.*
500	250 to 1000	6 to 7	8 to 9	10 to 11		5A and 12A
125	62 to 250	6 to 7	10 to 11	5A to 9	8 to 12A	5A and 12A
30	20 to 62	6 to 7	8 to 9	10 to 11		5 and 12
17	10 to 20	7 to 9	8 to 10	6 to 7	10 to 11	5 and 12
7.5	4 to 10	6 to 7	10 to 11	8 to 12	5 to 9	5 and 12
2	1 to 4	(5 to 7 to 9 to 11)		(6 to 8 to 10 to 12)		5 and 12

Output Power

The amplifier is capable of delivering approximately 50 watts to a nominal load impedance.

In cases where a power output of 50 watts is not required and the a-c. line voltage is less than 120 volts, satisfactory operation with a maximum output power of 25 watts may be obtained by removing two of the 6L6 Output Tubes V5 and V6 (see schematic). These are the tubes located nearest the power transformer and the retard coil both of which are toward one end of the chassis. Equally satisfactory operation of the amplifier will result if tubes V3 and V4 are removed in place of V5 and V6. When only two output power tubes are employed all the nominal and working range load impedances given under "Output Connections" should be multiplied by a factor of 2. The gain of the amplifier under this condition is reduced by 3 db, power consumption is reduced to approximately 150 watts and the fuse employed should be a 2 ampere Buss Fusetron.

Loud speakers or other devices connected to the amplifier output should be capable of handling this power. When the load will not handle this power some means of protecting it should be provided.

When less than 4 similar loud speakers are used series operation of these units is recommended. When dissimilar types of loud speakers are used or when more than 4 loud speakers are connected to the output of the amplifier a parallel connection of these units is recommended.

Cabinet Ventilation

Care should be taken when mounting the amplifier on a partially closed shelf or in a perforated cabinet to provide sufficient ventilation for adequate cooling. The temperature of the air 1 inch above the output transformer should never be more than 30 degrees Fahrenheit above room temperature and under maximum room temperature condition should not exceed 130 degrees Fahrenheit.

This condition may usually be realized for a single 118A Amplifier if approximately 60 square inches of opening to free air at room temperature is provided in the housing near the bottom of the amplifier and a similar area in the top. At least 4" of space should be provided between the top of the housing and the nearest part of the amplifier.

When additional 118A Amplifiers or other equipment of similar wattage dissipation are mounted within the same cabinet, a proportionately larger area of opening must be provided in the cabinet to meet the recommended temperature requirements. A space of at least seven inches should be provided between 118A Amplifier or between a 118A Amplifier and other equipment of similar heat dissipation.

Mounting

The amplifier is designed for either horizontal mounting as in a cabinet ventilated as described above or vertical mounting as on a standard 19 inch relay rack. In either case the safety precautions described below should be adhered to. When the amplifier is not mounted in a metal cabinet or when it is mounted on a relay rack adjacent to other equipment a metal bottom plate should be used to provide adequate electrical shielding. The mounting holes are spaced for standard 19 inch vertical relay rack mounting and when so mounted a standard 12¼" cover plate should be used.

Safety Precautions

The local inspection authority should be consulted regarding requirements for installation and use. In general in order to meet these requirements no terminals or wiring involving the a-c. supply or secondary power shall be exposed to accidental contact. This may be accomplished as follows:

(1) When the amplifier is mounted in a cabinet with front or rear doors, switches in the a-c. supply operated by these doors should be provided to render live parts inaccessible when the cabinet is open for service.

(2) When the amplifier is mounted on a relay rack or an open type cabinet or shelf the (OUT—A.C.) terminal strip should be covered with an insulating plate and the wiring side of the amplifier should be covered with a metal bottom plate at least $\frac{1}{16}$" thick attached to the chassis flanges. With this form of mounting connection should be made to the rear of the covered terminal strip through the ¾" pipe knock out hole provided in the end wall of the chassis. A similar knock out hole is provided at the other end for a similar connection to the input terminal strip.

For additional information refer to the distributor from whom the apparatus was purchased.

This Equipment Designed and Developed for

Western Electric

by

BELL TELEPHONE LABORATORIES, INC.